Specification

Tianma Part Number: TM123XDHP90-00
Description: 12.3” TFT LCD Module SFT

	Department	Name	Signature
Tianma	Integrate Project Manager	Jon Miller	
	Project Management	Zhu Tiantian	
Customer			

Company confidential. Duplication or disclosure prohibited. All rights reserved
RoHS

Revision History

Version	Page	Revision Items	Name	Date
V0.1	All	First release	Zhu Tiantian	20160530
V0.2	4,5,6,7, 8,9,15, 19	Update module weight, Update connector type, Add de-rating curve, Update power sequence, Update drawing Remove initial code	Zhu Tiantian	20160608
V0.3	5,6,8,9, 10,14, 19,21	Update pin assignment Update DC Characteristics for Panel Driving Update de-rating curve Update input timing chart Delete response time @-40℃, update test condition Update drawing Update bright spots inspection standard	Zhu Tiantian	20160705

Company confidential. Duplication or disclosure prohibited. All rights reserved
RoHS

Table of Contents

1. Precautions for Use of LCD Modules 3
2. General Specifications 4
3. Input / Output Terminals 5
4. Absolute Maximum Ratings 7
5. Electrical Characteristics 8
6. Optical Characteristics 14
7. Reliability Test 17
8. Mechanical Drawing 19
9. Product Inspection Criteria 20
10. Packing Instruction 22

Company confidential. Duplication or disclosure prohibited. All rights reserved
RoHS

1. Precautions for Use of LCD Modules

1.1 Handling Precautions

1.1.1 The display panel is made of glass. Do not subject it to a mechanical shock by dropping it from a high place, etc.

1.1.2 If the display panel is damaged and the liquid crystal substance inside it leaks out, be sure not to get any in your mouth, if the substance comes into contact with your skin or clothes, promptly wash it off using soap and water.

1.1.3 Do not apply excessive force to the display surface or the adjoining areas since this may cause the color tone to vary.

1.1.4 The polarizer covering the display surface of the LCD module is soft and easily scratched. Handle the polarizer carefully.

1.1.5 If the display surface is contaminated, breathe on the surface and gently wipe it with a soft dry cloth. If still not completely clear, moisten cloth with one of the following solvents:

- Isopropyl alcohol
- Ethyl alcohol

Solvents other than those mentioned above may damage the polarizer. Especially, do not use the following:

- Water
- Ketone
- Aromatic solvents

1.1.6 Do not attempt to disassemble the LCD Module.

1.1.7 If the logic circuit power is off, do not apply the input signals.

1.1.8 To prevent destruction of the elements by static electricity, be careful to maintain an optimum work environment.

1.1.8.1 Be sure to ground the body when handling the LCD Modules.

1.1.8.2 Tools required for assembly, such as soldering irons, must be properly grounded.

1.1.8.3 To reduce the amount of static electricity generated, do not conduct assembly and other work under dry conditions.

1.1.8.4 The LCD Module is covered with a film to protect the display surface. Be carefully and slowly when peeling off this protective film since static electricity may be generated.

1.2 Storage precautions

1.2.1 When storing the LCD modules, avoid exposure to direct sunlight or to the light of fluorescent lamps.

1.2.2 The LCD modules should be stored under the storage temperature range. the recommend condition is: Temperature : 0℃ ～ 40℃, Relatively humidity: ≤80%, and no more than 1 year..

1.2.3 The LCD modules should be stored in the room without acid, alkali and sulfur compound harmful gas, etc.

1.3 Transportation Precautions

1.3.1 The LCD modules should be no falling and violent shocking during transportation, and also should avoid excessive press, water, damp and sunshine.

Company confidential. Duplication or disclosure prohibited. All rights reserved
RoHS

2. General Specifications

This is 12.3 inch Amorphous-TFT-LCD (Thin Film Transistor Liquid Crystal Display) module. It is composed of a 12.3 inch TFT-LCD panel, LCD Driver IC with T-con integrated, FPC and a backlight unit.

This TFT-LCD Normally Black technology module which is designed for Automotive and other high reliability electronic products required high performance flat panel displays.

Requirements on Environmental Protection of this 12.3 inch module are Following *RoHS*.

Feature		Spec	Remark
Display Spec.	Size	12.3 inch	
	Resolution	1920(RGB) x 720	
	Interface	2 port LVDS (VESA)	
	Color Depth	16.7M	
	Technology Type	a-Si	
	Pixel Pitch (mm)	0.15225 x 0.15225	
	Pixel Configuration	R.G.B. Vertical Stripe	
	Display Mode	Transmissive with Normally Black	
	Surface Treatment(Up Polarizer)	AG	
	Gray Scale Inversion Direction	NA	
	Viewing Direction	NA	
	LCM (W x H x D) (mm)	311.00 x 130.00 x 8.5 (typ.)	Note 2
Mechanical Characteristics	Active Area(mm)	292.32×109.62	
	With /Without Touch Panel	Without	
	Weight (g)	(490g)	Note 3
	LED Configuration	4 parallels 10serials	

Note 1: Requirements on Environmental Protection: RoHS.
Note 2: The height dimension does not include the FPC and Screw.
Note 3: LCM weight tolerance: ± 10%.

Company confidential. Duplication or disclosure prohibited. All rights reserved
RoHS

3. Input / Output Terminals

3.1 Pin assignment for TFT Interface

Connector type: IMSA-9685S-50B-GFN4

Pin NO.	P/I/O	Pin Define	Description	Remark
1	P	GND	Ground	
2	P	GND	Ground	
3	P	GND	Ground	
4	P	VDD	3.3+/-0.3V	
5	P	VDD	3.3+/-0.3V	
6	P	VDD	3.3+/-0.3V	
7	P	VDD	3.3+/-0.3V	
8	P	GND	Ground	
9	P	GND	Ground,for tianma OTP use	
10	P	GND	Ground,for tianma OTP use	
11	N	NC	Not Connect,for tianma OTP use	
12	P	GND	Ground	
13	I	OLV2N	Odd LVDS data input 2-	
14	I	OLV2P	Odd LVDS data input 2+	
15	P	GND	Ground	
16	I	OLV1N	Odd LVDS data input 1-	
17	I	OLV1P	Odd LVDS data input 1+	
18	P	GND	Ground	
19	I	OLV0N	Odd LVDS data input 0-	
20	I	OLV0P	Odd LVDS data input 0+	
21	P	GND	Ground	
22	I	OLV3N	Odd LVDS data input 3-	
23	I	OLV3P	Odd LVDS data input 3+	
24	P	GND	Ground	
25	I	OLVCKN	Odd LVDS Clock input -	
26	I	OLVCKP	Odd LVDS Clock input +	
27	P	GND	Ground	
28	I	ELVCKN	Even LVDS Clock input -	
29	I	ELVCKP	Even LVDS Clock input +	
30	P	GND	Ground	
31	I	ELV1N	Even LVDS data input 1-	
32	I	ELV1P	Even LVDS data input 1+	
33	P	GND	Ground	
34	I	ELV3N	Even LVDS data input 3-	
35	I	ELV3P	Even LVDS data input 3+	
36	P	GND	Ground	
37	I	ELV2N	Even LVDS data input2 -	
38	I	ELV2P	Even LVDS data input2+	
39	P	GND	Ground	

Company confidential. Duplication or disclosure prohibited. All rights reserved
RoHS

40	I	ELV0N	Even LVDS data input 0-	
41	I	ELV0P	Even LVDS data input 0+	
42	P	GND	Ground	
43	I	RESET	Global reset pin, active low.	
44	I	STBYB	Standby mode setting pin, active low.	
45	I	SHLR	Horizontal shift direction (source output) selection	
46	I	UPDN	Vertical shift direction (gate output) selection	
47	O	Fail_T	Output for fail detection	Note 3
48	P	GND	Ground	
49	N	NC	no connect	
50	N	NC	no connect	

Table 3.1.1 Pin assignment for TFT interface

Note1: All of GND pins should be connected to system ground.

Note2: I/O definition.
I---Input, O---Output, P--- Power/Ground, N--- No connection

Note3:Fail_T——：normally pull L in IC，active “H”

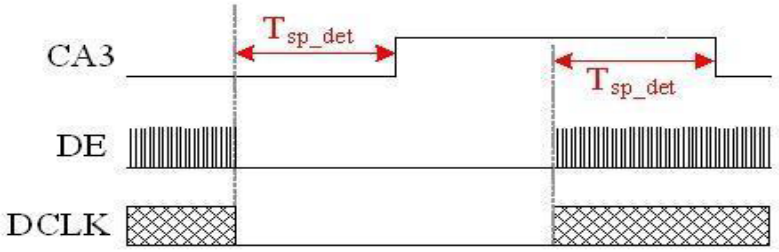

When CLK lost，Tsp_det =23.8ms
When DE lost, Tsp_det=45.9ms~91.9ms (assume DCLK = 45MHz)
Don’t connect this pin to an output pin in customer system,it must be connected to input pin or NC.

Note4:Scan Direction Control Description
The level of TB and RL signal control vertical shift direction and horizontal shift direction.
Relationship between source output and RL.

SHLR	Source output sequence and data order	Remark
H	Left→Right	Default
L	Right→Left	-

Relationship between vertical shift direction and TB.

UPDN	Function	Remark
H	Top→ Bottom	Default
L	Bottom→ Top	-

Company confidential. Duplication or disclosure prohibited. All rights reserved
RoHS

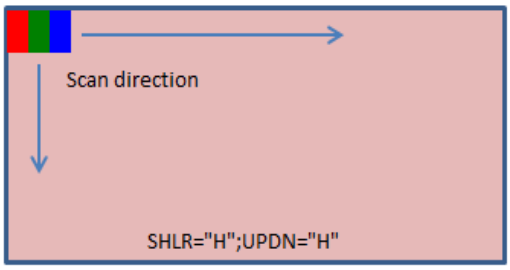

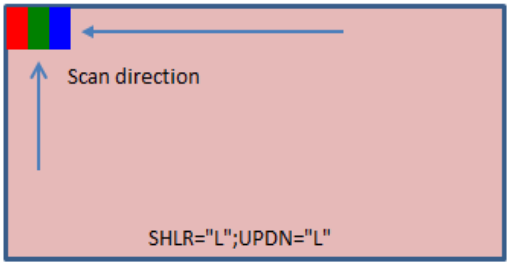

（Default）

Table 3.1.2 Scan direction Description

3.2 Pin assignment for backlight interface

Connector type: IMSA-9685S-10A-GFN4

No	Symbol	I/O	Description	Remark
1	A1 A2	P	LED Anode	
2	A3 A4	P	LED Anode	
3	GND	P	Ground	
4	THER+	P	Thermistor +	
5	THER-	O	Thermistor -	
6	GND	O	Ground	
7	C4	P	LED Cathode	
8	C3	P	LED Cathode	
9	C2	P	LED Cathode	
10	C1	P	LED Cathode	

Table 3.2.1 Pin assignment for backlight interface

4. Absolute Maximum Ratings

GND=0V，Ta=25℃

Item	Symbol	Min	Max	Unit	Remark
Logic supply voltage	VDD	-0.3	3.96	V	
Operating Temperature	Top	-40	85	℃	Note1
Storage Temperature	Tst	-40	95	℃	Note2

Table 4.1.1 absolute maximum rating

Note1: During -40~-30℃(ambient) , the operating performance is not guaranteed except functional failure occurs
Note2: Only for TFT module. For optical bonding, it is suggested shall not exceed 90℃.
Note3: If the voltage exceeds its absolute maximum ratings, the LCM may be damaged.If the LCM is operated with the absolute maximum ratings for a long time, performance will decreased.
Note4: Functional operation should be restricted under normal ambient temperature.

Company confidential. Duplication or disclosure prohibited. All rights reserved
RoHS

5. Electrical Characteristics

5.1 DC Characteristics for Panel Driving

GND=0V，Ta=25℃

Item	Symbol	MIN	TYP	MAX	Unit	Remark
Supply voltage	VDD	3.0	3.3	3.6	V	
Supply current	IVDD		460	600	mA	NOTE1
Permissible Ripple Voltage of VDD	Vr			100	mV	
Input High Voltage	V_{IH}	0.8*VDD		VDD+0.3	V	
Input Low Voltage	V_{IL}	GND-0.3		0.2*VDD	V	

Table 5.1.1 Operating voltage

Parameter	Symbol	Condition	Spec			Unit
			Min	Typ	Max	
Differential input high threshold voltage	Vth	VCM=1.2V	+0.1	-	-	V
Differential input low threshold voltage	Vtl		-	-	-0.1	V
Differential input common mode voltage	VCM	-	1	1.2	1.7-|Vid|/2	V
LVDS input voltage	VINLV	-	0.7	-	1.7	V
NLVDS common mode voltage	ΔVCM	1V＜VCM＜1.6V	No limit	-	-	-
NLVDS common mode voltage	ΔVCM	1V≥VCM or VCM≥1.6V	-	-	250mV	mV
Differential input voltage	|Vid|	-	0.4	-	0.6	V
Differential input leakage current	Ilvleak	-	-10	-	+10	uA

Table 5.1.2 LVDS mode DC electrical characteristics

Note 1: Test at white pattern，Ta=25℃，f=60HZ，VCC=3.3V
Note 2: Above of all these items spec is the precondition that panel can operate normally.
Note 3: This is preliminary SPEC, some of these items may be updated according to panel actually display quality and actually electrical characteristics.
Note 4: Description of |Vid| is as below

5.2 DC Characteristics for Backlight Driving

Item	Symbol	Min	Typ	Max	Unit	Remark
Forward Current	I_{BL}	--	90	--	mA	Note1
Forward Voltage	V_{BL}	27	30	34	V	
Life Time	-	10000	-	-	Hrs	Note2

Company confidential. Duplication or disclosure prohibited. All rights reserved
RoHS

Table 5.2.1 LED backlight characteristics

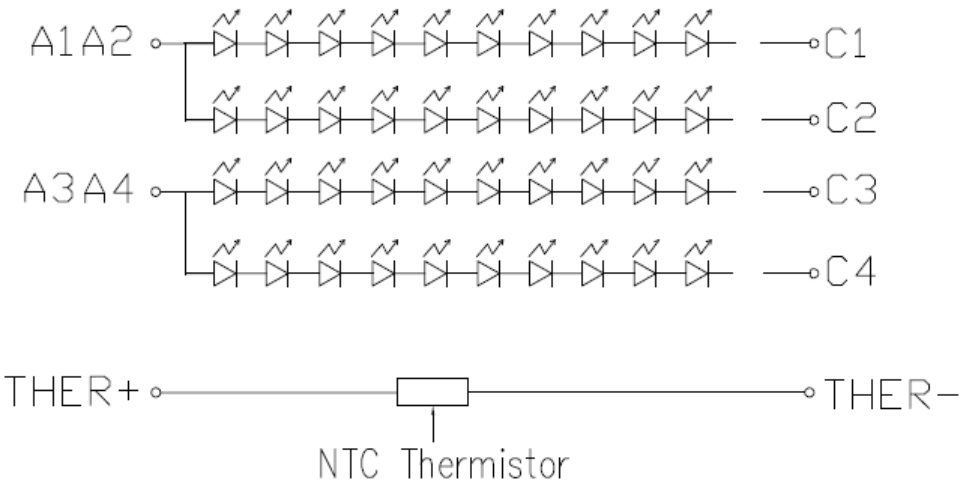

Figure 5.2.2 LED connection of backlight

Note 1: I_{BL} is defined for one channel LED, There are total 4 LED channels in back light unit Under LCM operating, the stable forward current should be inputted.

Note 2: Optical performance should be evaluated at Ta=25℃ only. If LED is driven by high current, high ambient temperature & humidity condition. The life time of LED will be reduced. Operating life means brightness goes down to 80% of original brightness.

Note 3: The LED circuit de-rating curve refers to figure 5.2.3

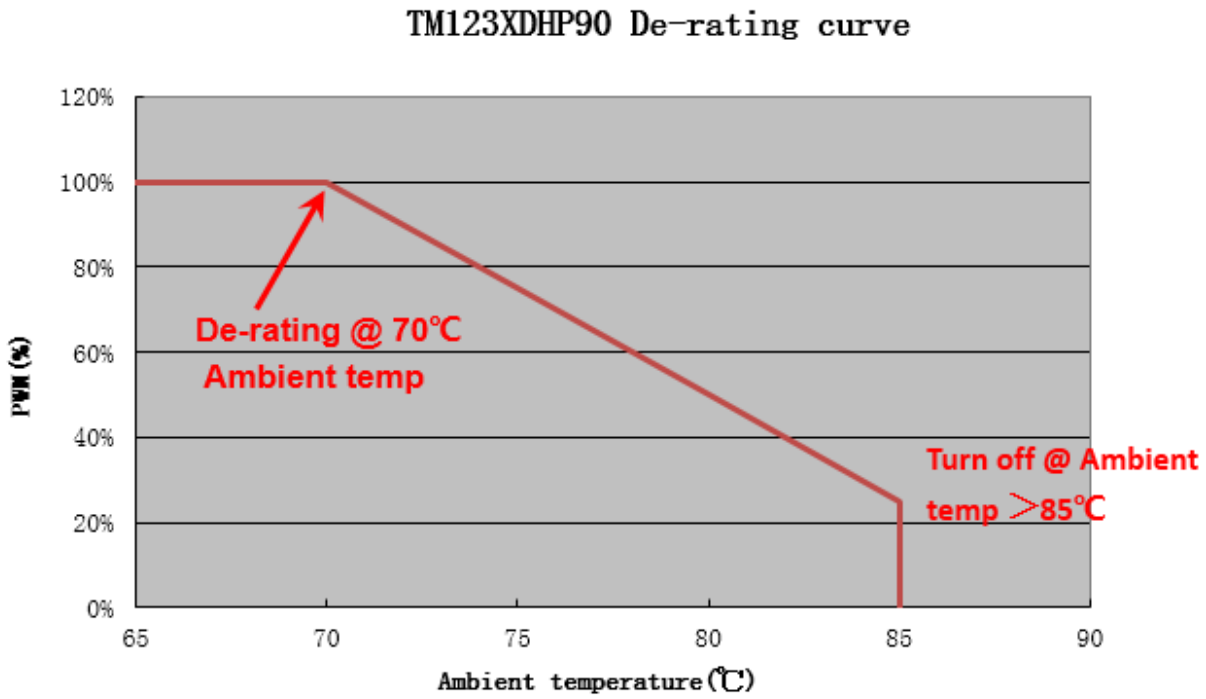

Figure 5.2.3 De-rating Curve for LCM operating

Company confidential. Duplication or disclosure prohibited. All rights reserved
RoHS

5.3 Input Signal Timing

Parameter	Symbol	Unit	Min.	Typ.	Max.	Remark
Clock Frequency	f_{dck}	MHz		44.1		
H Total Time	T_h	clocks	984	992	1005	
H Active Time	Thd	clocks		960		
V Total Time	T_v	lines	730	741	753	
V Active Time	Tvd	lines		720		
V Frequency	f_v	Hz	50	60	65	

Input timing chart

- **Horizontal**

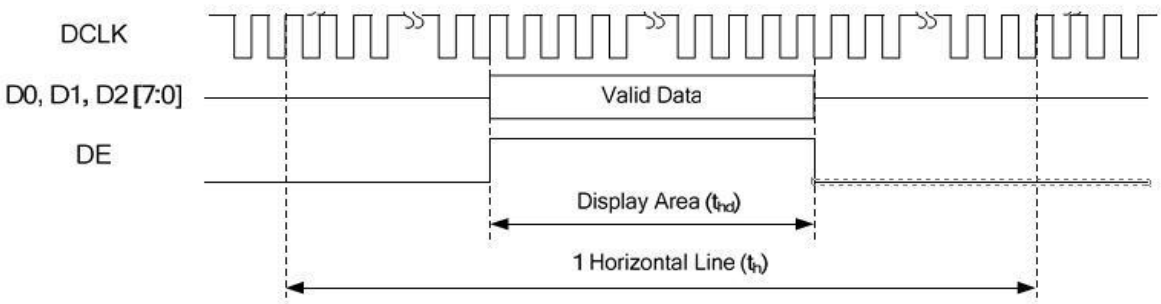

- **Vertical**

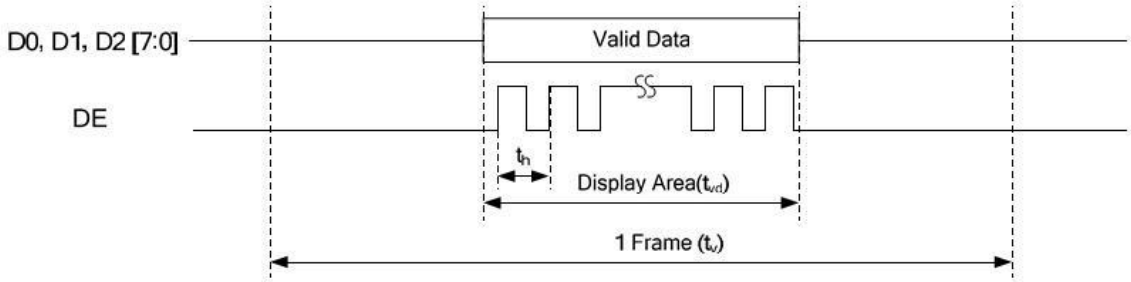

Company confidential. Duplication or disclosure prohibited. All rights reserved
RoHS

Data Mapping

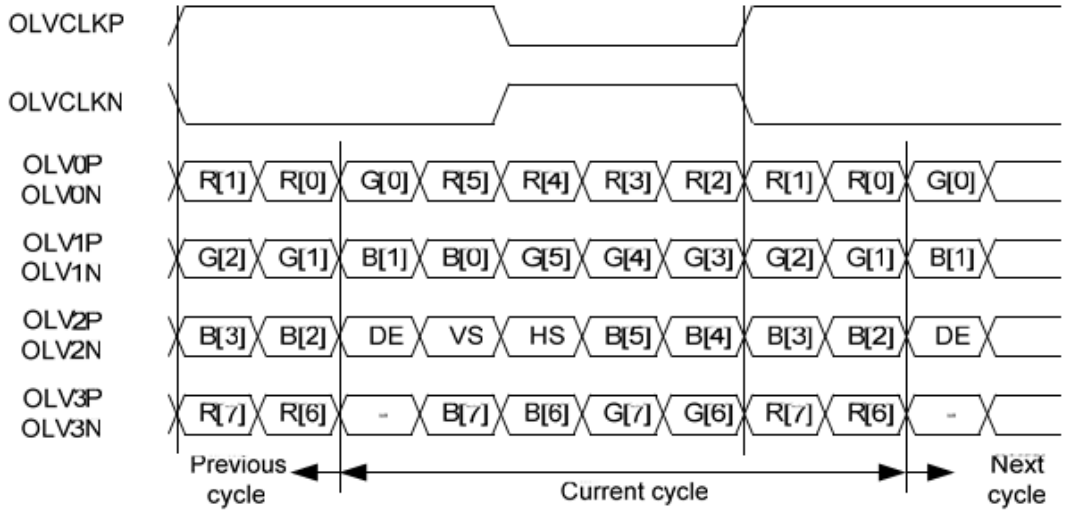

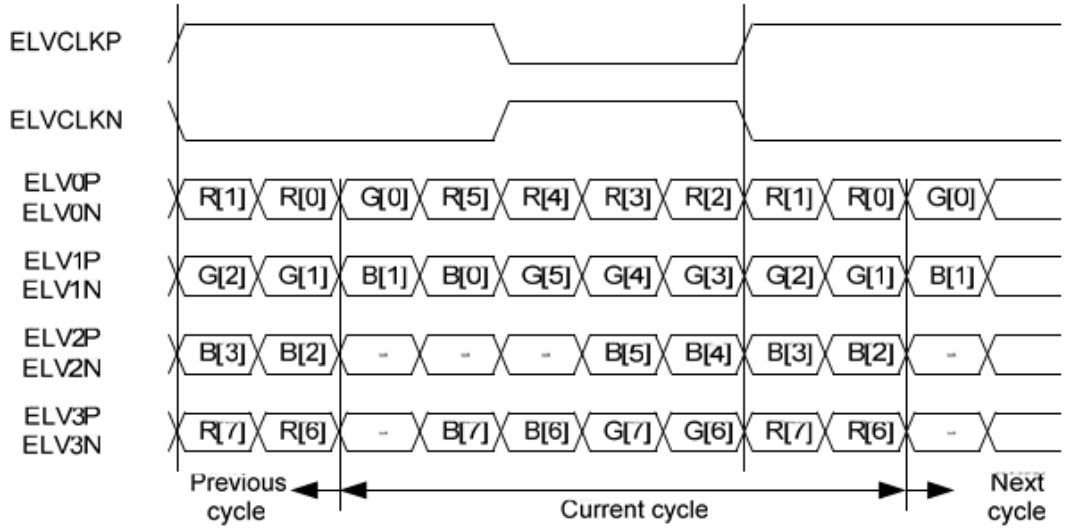

Company confidential. Duplication or disclosure prohibited. All rights reserved
RoHS

5.4 Recommended Power ON/OFF Sequence

Power on sequence

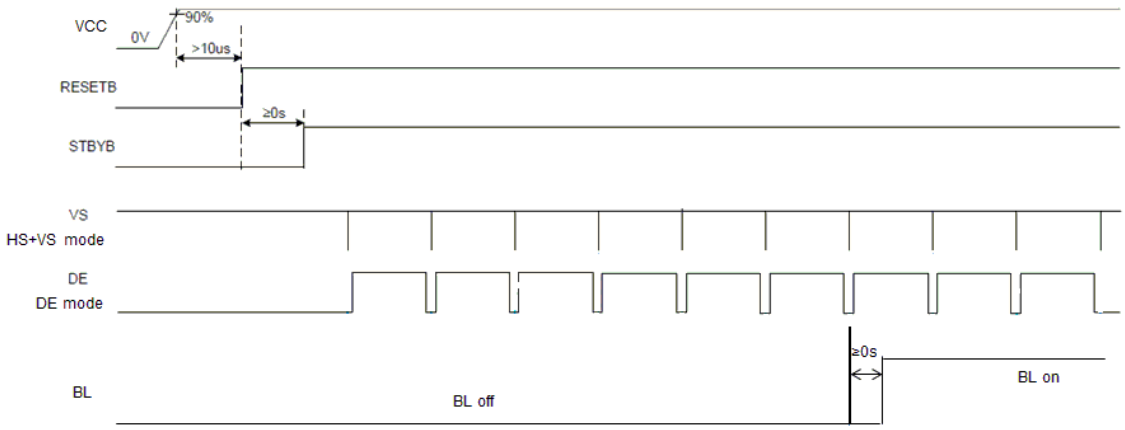

Note: (1) The LVDS signals must start to send all relate signals before 20ms or after 100ms from STBYB rising.

Power off sequence

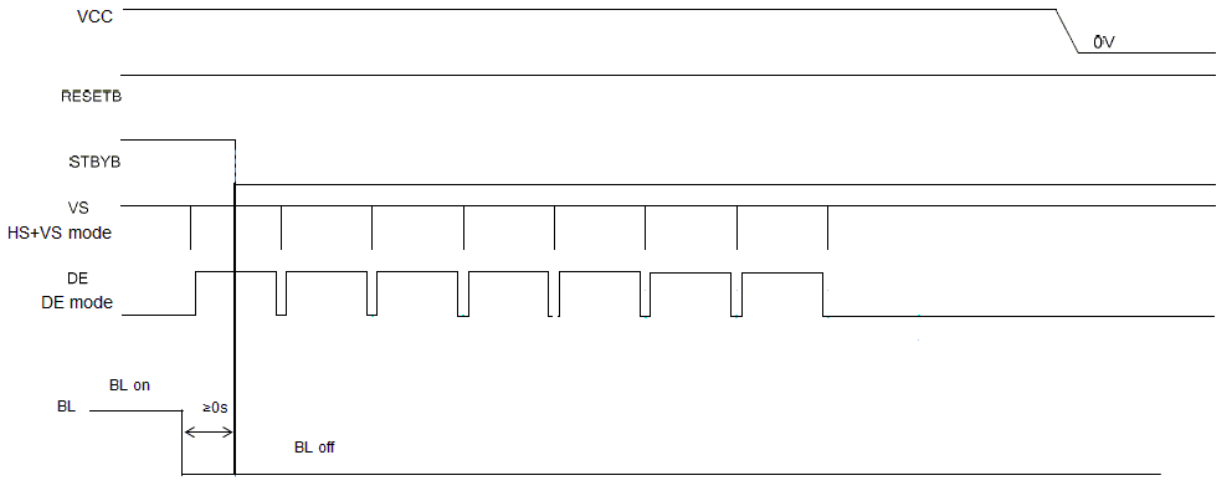

Company confidential. Duplication or disclosure prohibited. All rights reserved
RoHS

5.5 LCD Block Diagram

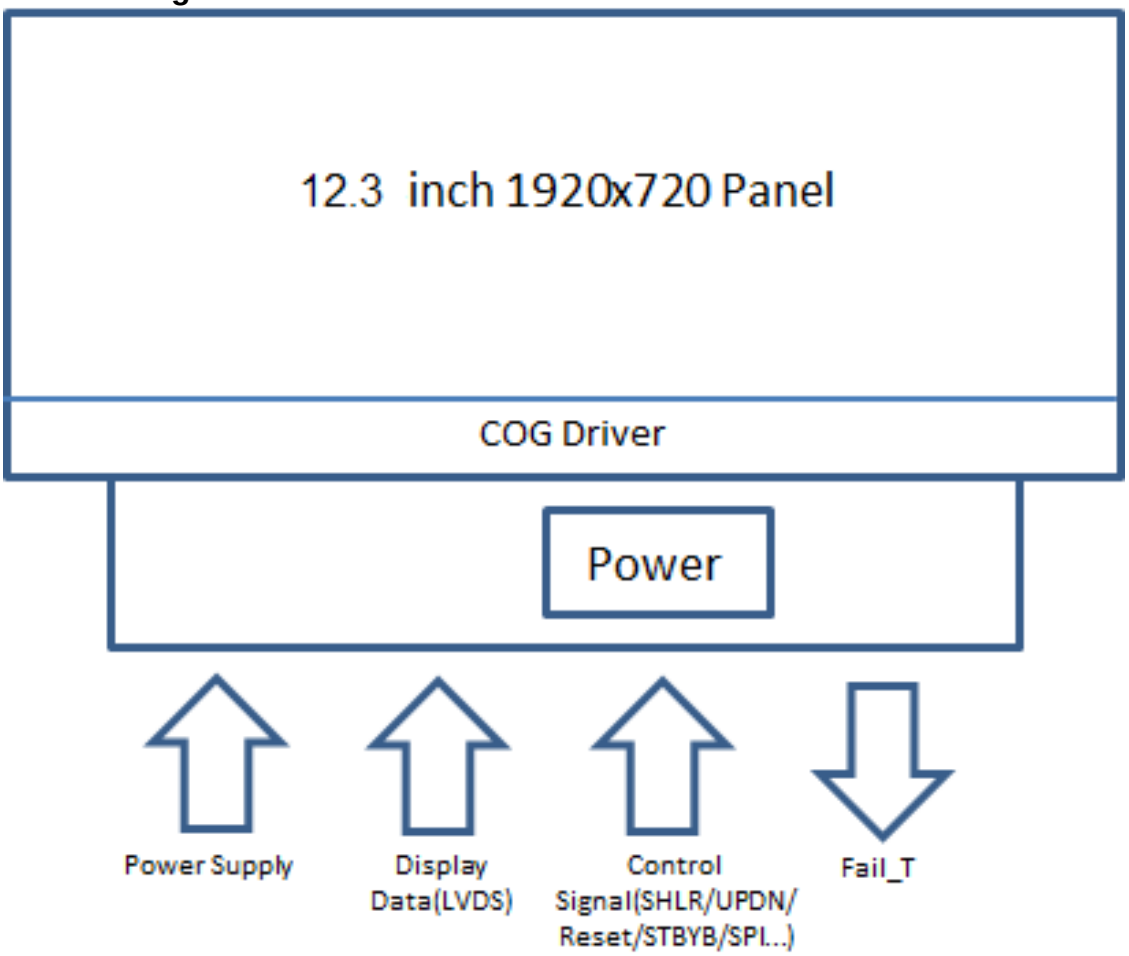

Company confidential. Duplication or disclosure prohibited. All rights reserved
RoHS

6. Optical Characteristics

Item		Symbol	Condition	Min	Typ	Max	Unit	Remark
Contrast Ratio		CR	Perpendicular ,25℃	800	1000	--		Note1 Note3
View angle		--	V:-25°/+35° H:-40°/+40° ,25℃	100	--	--		Note2
Response Time		Ton+Toff	25℃	--	--	30	ms	Note4
			-30℃	--	--	600		
Chromaticity	White	x	Backlight is on	0.280	0.310	0.340		Note1 Note5
		y		0.300	0.330	0.360		
	Red	x		0.616	0.646	0.676		
		y		0.296	0.326	0.356		
	Green	x		0.282	0.312	0.342		
		y		0.594	0.624	0.654		
	Blue	x		0.122	0.152	0.182		
		y		0.025	0.055	0.085		
Uniformity		White	15 points	80	--	--	%	Note1 Note6
		Black		50	--	--		
NTSC			Perpendicular	--	75	--	%	Note5
Gamma		γ		2.2	2.4	2.6		
Luminance		L	Perpendicular	800	1000	--	cd/m^2	Note1 Note7

Test Conditions:

1. I_F= 90mA (one channel), the ambient temperature is 25℃.
2. The test systems refer to Note 1 and Note 2.

Company confidential. Duplication or disclosure prohibited. All rights reserved
RoHS

Note 1: Definition of optical measurement system.
The optical characteristics should be measured in dark room. After 5 minutes operation, the optical properties are measured at the center point of the LCD screen. All input terminals LCD panel must be ground when measuring the center area of the panel.

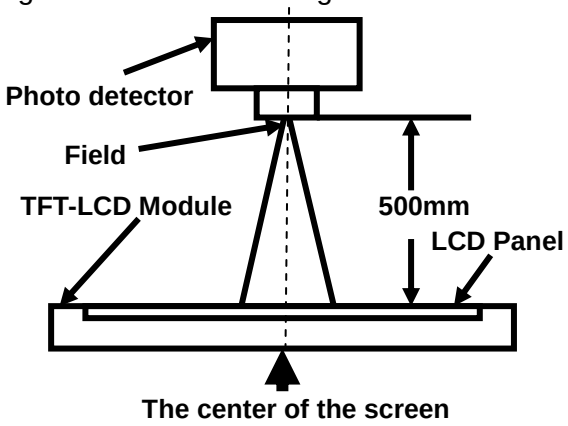

Item	Photo detector	Field	High
Contrast Ratio	SR-3	1°	H=500 mm
Luminance			
Chromaticity			
Lum Uniformity			
Response Time	DMS	3mm	H=200 mm

Note 2: Definition of viewing angle range and measurement system
Viewing angle is measured at the center point of the LCD by EZ-Contrast .
FPC at φ=90°,the measurement area is V:-25°/+35°H:-40°/+40°

Note 3: Definition of contrast ratio
“White state “:The state is that the LCD should driven by Vwhite.
“Black state”: The state is that the LCD should driven by Vblack.
Vwhite: To be determined Vblack: To be determined.

$$\text{Contrast ratio (CR)} = \frac{\text{Luminance measured when LCD is on the "White" state}}{\text{Luminance measured when LCD is on the "Black" state}}$$

Note 4: Response time (Ton + Toff)
The response time is defined as the LCD optical switching time interval between “White” state and “Black” state. Rise time (Ton) is the time between photo detector output intensity changed from 10% to 90%. And fall time (Toff) is the time between photo detector output intensity changed from 90% to 10%., Refer to below, measured by LCD5200.

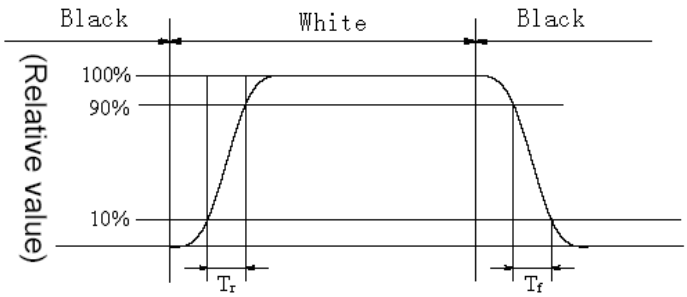

Note 5: Definition of color chromaticity (CIE1931)
Color coordinates measured at center point of LCD.

Note 6: Definition of Luminance Uniformity
Active area is divided into 15 measuring areas . Every measuring point is placed at the

Company confidential. Duplication or disclosure prohibited. All rights reserved
RoHS

center of each measuring area.
Luminance Uniformity (U) = Lmin/ Lmax
L-------Active area length W----- Active area width
Lmax: The measured Maximum luminance of all measurement position.
Lmin: The measured Minimum luminance of all measurement position.

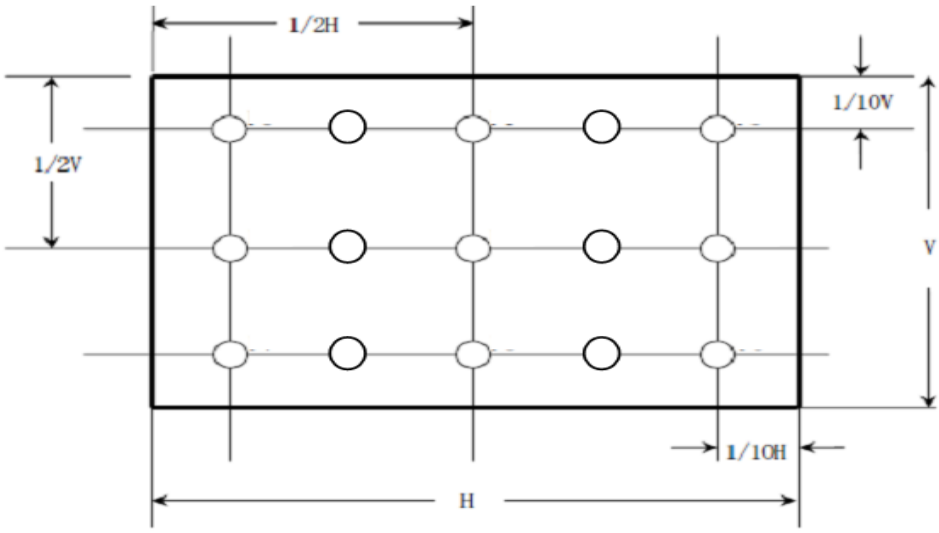

Note 7: Definition of luminance
Luminance is measured at the center point of the LCD by EZ-Contrast .
FPC at φ=90°, the measurement points are 40°/0°, 30°/90°,40°/180° and 25°/270°.

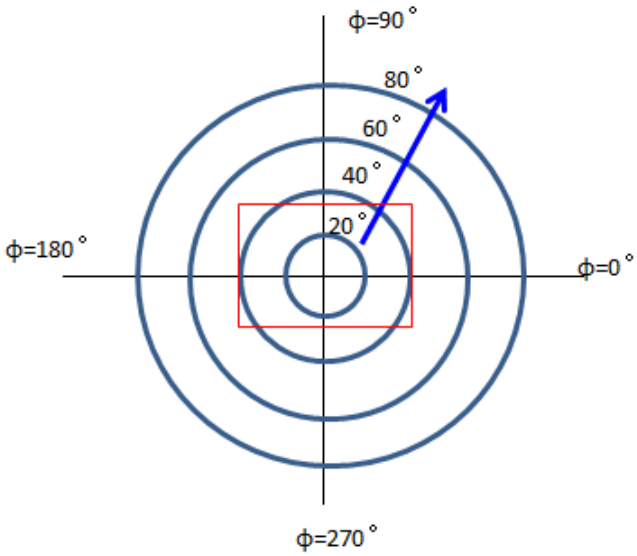

Company confidential. Duplication or disclosure prohibited. All rights reserved
RoHS

7. Reliability Test

7.1 Content of Reliability Test

No	Test Item	Condition	Judgment
1	High Temperature Operation	Ts=+85°C +/-2°C ,500 hours Operating, Restore 2H at 25℃	note1, note2, note3, note4
2	Low Temperature Operation	Ts= -30°C +/-2°C,500 hours Operating, Restore 2H at 25℃	note1, note2, note3, note4
3	High Temperature Storage	Ts= 95°C +/-2°C,500 hours Not Operating, Restore 2H at 25℃	note1, note2, note3, note4
4	Low Temperature Storage	Ts=-40°C +/-2°C,500 hours Not Operating, Restore 2H at 25℃	note1, note2, note3, note4
5	High Temperature & Humidity Operation	Ts=+60°C +/-2°C 90% +/-3% RH ,500 hours Operating, Restore 2H at 25℃	note1, note2, note3, note4
6	Thermal Shock	Ts=+85°C(0.5hour)/-40°C(0.5hour) for 100 cycles Not Operating	note1, note2, note3, note4
7	Electrostatic Discharge	C=150pF±10%, R=330Ω±10%, 5 point/panel surface, Contact discharge: ±6kV, 5times Air discharge: ±8kV, 5times (Environment:15℃~35℃, 30%~60%. 86Kpa~106Kpa)	note 5
8	Vibration Test	Frequency: 8 - 33.3 Hz, Total amplitude: 1.3mm Frequency: 33.3 - 400 Hz, Acceleration: 29.4 m/s² sweep time: 15 minutes 2 hours each for X and Z directions, 4 hours for Y direction (total 8 hours) non-operation	note 2
9	Mechanical Shock	980m/s 2 , 6ms, ± X; ± Y; ± Z, 2 times for each direction	note 2

Note 1: Ts: Panel Surface temperature.
Note 2: The test result shall be evaluated after the sample has been left at room temperature and humidity for 2 hours without load. No condensation shall be accepted. The sample shall be free from defects:

1). Air bubble in the LCD;
2). Seal leak
3). Non-display
4). Missing segments
5). Glass crack

Note 3: Each test item applies for a test sample only once, the test sample cannot be used again in any other test item.
Note 4: CR degradation must be less than 50%; Brightness degradation must be less than 50%.

Company confidential. Duplication or disclosure prohibited. All rights reserved
RoHS

Note 5: ESD check details as below:
For A-D Criterion, Tianma will judge panel as OK. If E condition happened in customer system, Tianma should support to analyze and find out the solution together with customer.

Class	Performance
A	All functions perform as designed during and after exposure to interference
B	Temporary degradation or less of performance which is self-recoverable
C	Degradation or less of performance which requires operator intervention to recover
D	Degradation or less of performance which requires system reset to recover
E	Degradation or less of function which is not recoverable

Company confidential. Duplication or disclosure prohibited. All rights reserved
RoHS

8. Mechanical Drawing

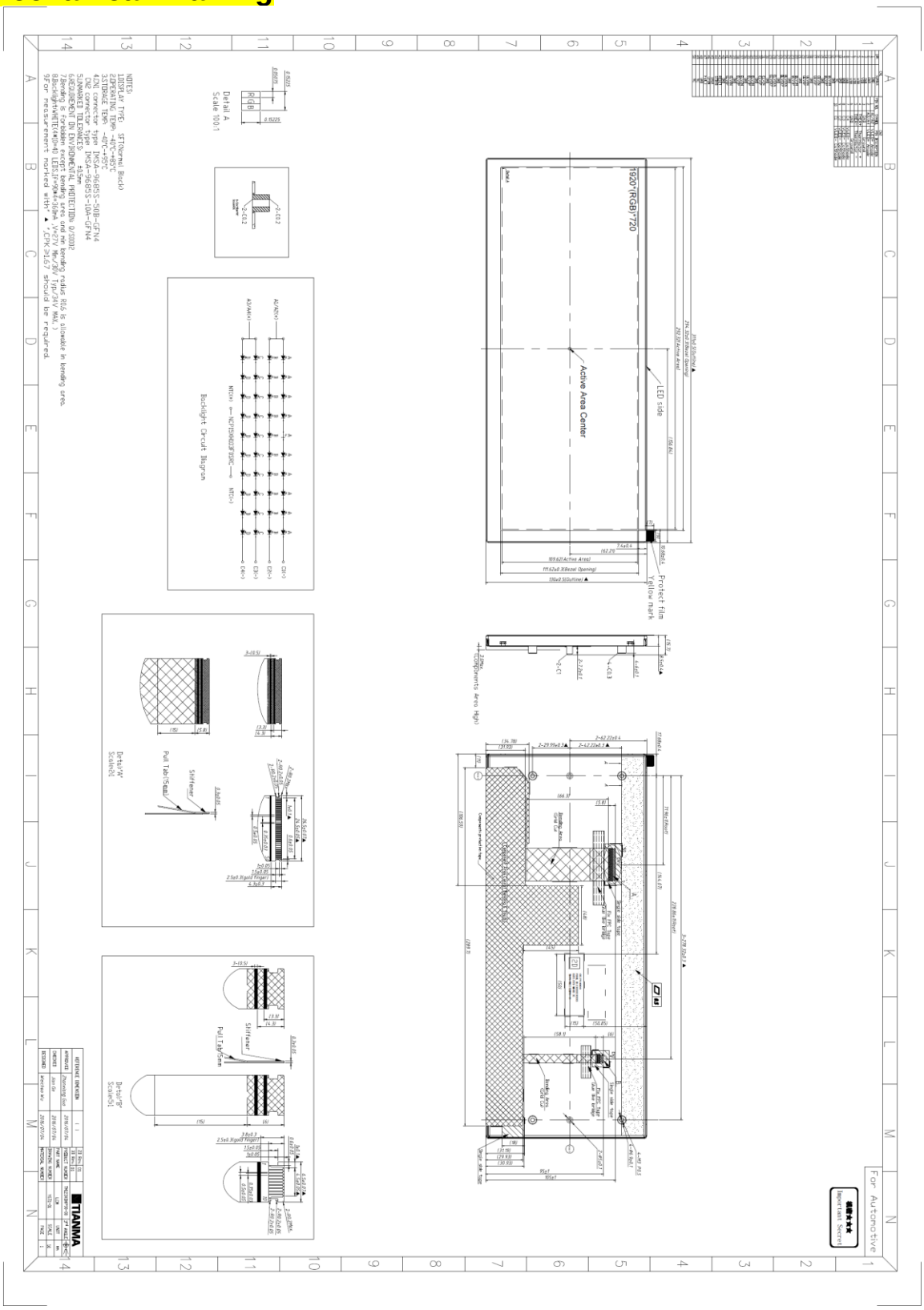

Company confidential. Duplication or disclosure prohibited. All rights reserved
ROHS

9. Product Inspection Criteria

9.1 Scope:

The incoming inspection standards shall be applied to TFT-LCD Modules (hereinafter called "Modules") that supplied by Tianma Micro-Electronics Corporation.

9.2 Incoming Inspection

The buyer shall inspect the modules within twenty calendar days of the delivery date (the inspection period). The result of the inspection (acceptance or rejection) shall be recorded in writing, and a copy of this writing will be promptly sent to the seller. If the results of the inspecting from buyer does not send to the seller within twenty calendar days of the delivery date. The modules shall be regards as accepted.

9.3 Inspection Sampling Method

Lot size: Quantity per shipment lot per model
Sampling type: Normal inspection, Single sampling
Inspection level: II
Sampling table: MIL-STD-105D
Acceptable quality level （AQL）
Major defect: AQL=0.65
Minor defect: AQL=1.00

9.4 Inspection Conditions

Ambient conditions:

a. Temperature: Room temperature 25±5℃
b. Humidity: (60±10) ％RH
c. Illumination（the surface of LCD）
backlight-on 100-300Lux
backlight-off 800-1200lux

Viewing distance

The distance between the LCD and the inspector’s eyes shall be 35cm or more.

Viewing Angle

U/D: 45º/45º, L/R: 45º/45º

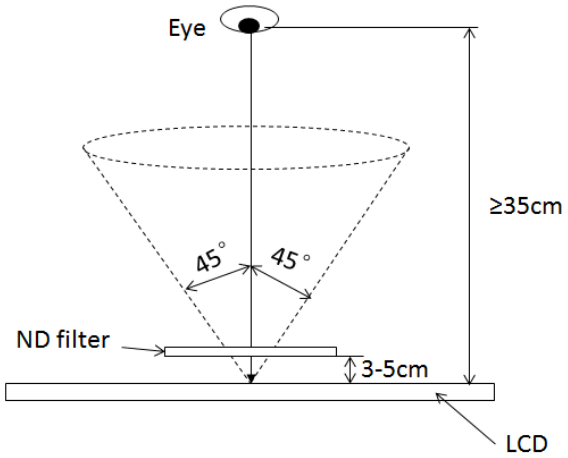

Company confidential. Duplication or disclosure prohibited. All rights reserved
RoHS

9.5 Cosmetic Inspection Criteria

Inspection Item	Inspection Standards		Acceptable Qty.	Applied Zone	Inspection Mode	Note
Bright spots	Visible through ND2%		None	A	Backlight-on at full black pattern	φ=（x+y）／2 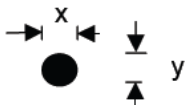
	Visible through ND5% but invisible through ND2%	φ≤0.2	Ignore			
		0.2 ＜ φ ≤ 0.4	4			
		0.40＜ φ	none			
	Invisible through ND5%		Ignore			
Dark spots	φ≤0.2 0.2 ＜ φ ≤ 0.4 0.40＜ φ		Ignore 4 None	A	Backlight-on at full white pattern	
Bright pixel dot	1 sub-pixel, Visible through ND2%		None	A	Backlight -on	
Dark pixel dot	1 sub-pixel		5 (distance ≥5mm)	A	Backlight -on	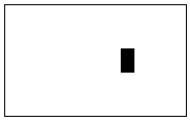
Lints & Scratches	W≤0.03 and L≤3.0 0.03＜ W≤0.05 and L≤3.0 0.05＜ W or L>3.0		Ignore 3 None	A\B	Backlight -on Backlight -off	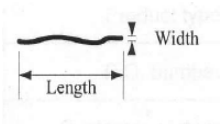
Dent/Bubble	φ≤0.2 0.2 ＜ φ ≤ 0.4 0.40＜ φ		Ignore 4 None	A\B	Backlight -on Backlight -off	φ=（x+y）／2 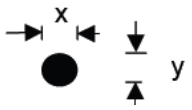
Mura	Visible through ND2% at full black pattern		None	A	Backlight -on	
Dirty\Dust	Those wiped out easily are acceptable			A\B	Backlight -off	\

Company confidential. Duplication or disclosure prohibited. All rights reserved
RoHS

10. Packing Instruction

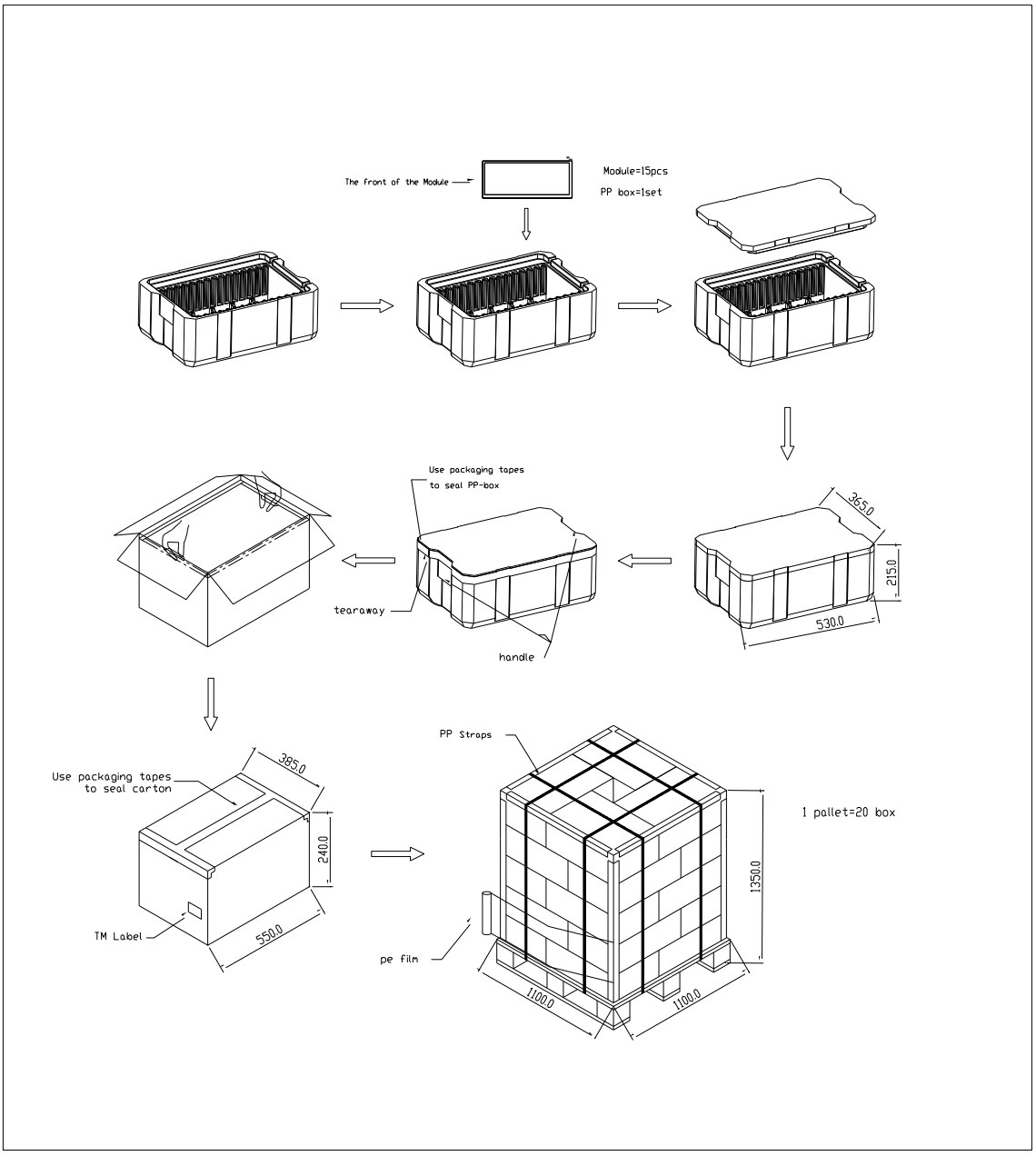

Company confidential. Duplication or disclosure prohibited. All rights reserved
RoHS